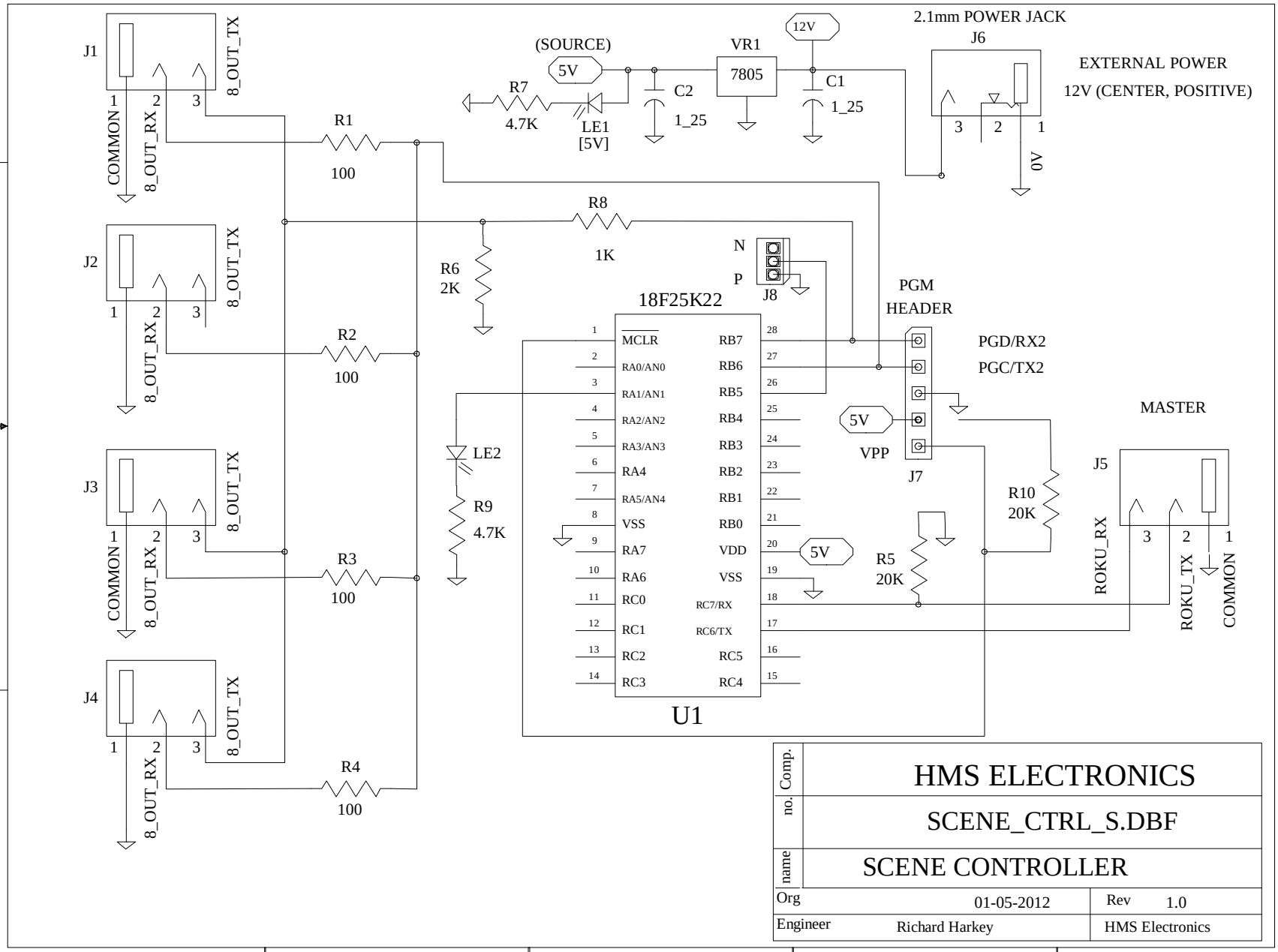

Comp.	HMS ELECTRONICS
no.	SCENE_CTRL_S.DBF
name	SCENE CONTROLLER
Org	01-05-2012 — Rev 1.0
Engineer	Richard Harkey — HMS Electronics